ROGERS

For the Perfection of Football Fundamentals™

Product Information Packet

Product Name: Big Brutus Hanging Dummy

Product Part Number: 410816, (80lb dummy) or 410817 (50lb dummy)

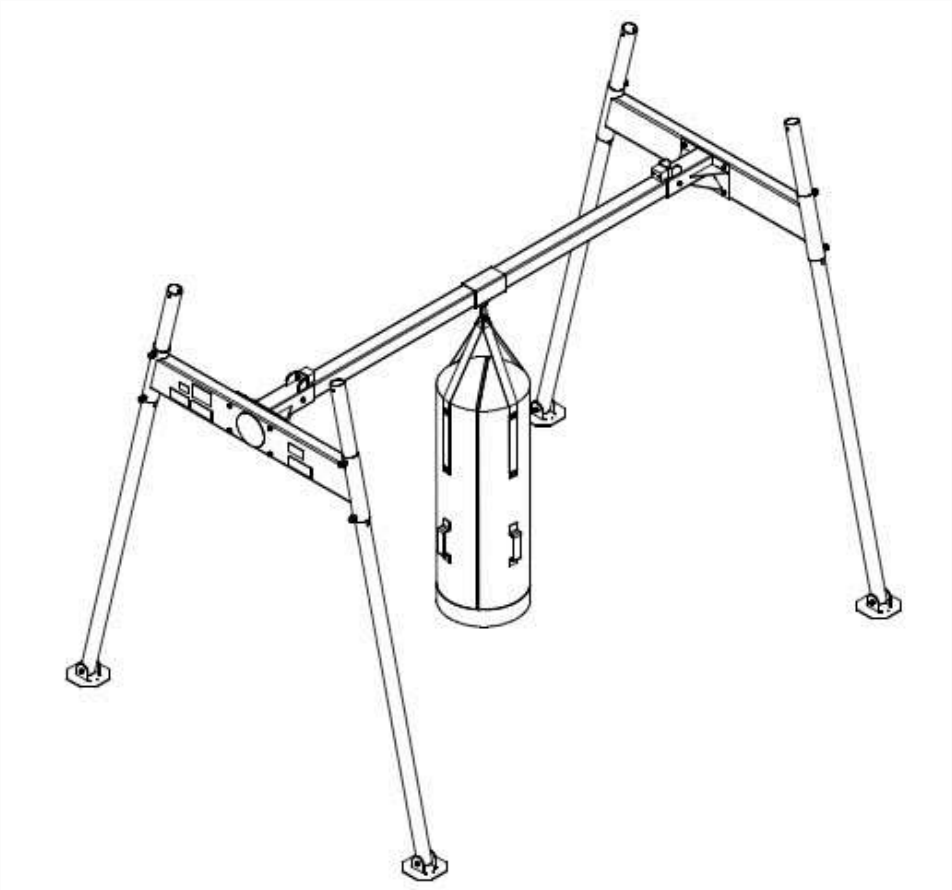

KEEP INFORMATION PACKET FOR FUTURE REFERENCE

Table of Contents

- Introduction…….. 1
- General Safety Rules……..2
- Symbols……..3
- Technical Specifications……..4
- User Instructions…….. 6
- Maintenance…… 7
- Customer Service Information……..11

12

Introduction

The Rogers Athletic Big Brutus Hanging Tackle Dummy has been designed and manufactured with safety, performance, and dependability as top priorities, making it easy to operate and maintain.

The care you give your Big Brutus Tackle Dummy will greatly determine your satisfaction with its performance and service life. Careful study of this manual is encouraged to obtain a thorough understanding of your new OFTM and its functions and maintenance.

If your manual should become lost or destroyed, Rogers Athletics will gladly provide you with a new copy. Should you require additional information or assistance, please feel free to contact us at 1-800-457-5337.

BECAUSE ROGERS ATHLETICS MAINTAINS AN ONGOING PROGRAM OF PRODUCT DEVELOPMENT AND IMPROVEMENT, WE RESERVE THE RIGHT TO MAKE IMPROVEMENTS IN DESIGN OR CHANGES IN SPECIFICATIONS WITHOUT INCURRING ANY OBLIGATIONS TO INSTALL THEM ON UNITS PREVIOUSLY SOLD.

General Safety Rules

WARNING!
READ AND UNDERSTAND ALL INSTRUCTIONS.
Failure to follow all instructions listed below may result in serious personal injury.

SAVE THESE INSTRUCTIONS

- **Supervision of athletes while using the equipment is recommended.** Horse play such as climbing on the machine or using the machine for unintended purpose can result in injuries.
- **Athletes should be oriented in the proper use of the equipment.**
- **Athletes should be properly fit to engage in a workout regimen.** Obtaining a medical exam prior to beginning any training program is recommended. If an athlete feels faint, dizzy, or experiences pain at any time while exercising, they should stop exercising and consult a physician.
- **Inspect equipment prior to use.** DO NOT use if it appears damaged or inoperable.

- **This Product Information Packet is an integral part of this machine.** Save these instructions. If they are lost or damaged or if you would like another copy, a copy can be downloaded from **www.RogersAthletic.com**

- **Reading the Product Information Packet is recommended.** Failure to read this Packet is considered a misuse of this equipment.

- **Warning labels are an integral part of this equipment.** Become familiar with all caution/warning labels and never cover or deface caution/warning labels.

- **Deploy the equipment allowing sufficient room for safe access to the machine, adequate room for the coaches to stand and to ensure that the machine or players do not collide with a wall, another machine, or other players through the entire training exercise.**

- **Unit is designed for training multiple offensive and defensive drills with proper technique.** Do not use Big Brutus Tackle Dummy for anything other than its approved purpose.

- **Always wear a helmet when training with the Big Brutus Tackle Dummy**

- **Equipment is designed for use by one person per pad at a time.** Keeping other athletes and spectators away from the machines during use is recommended.

- **Design and execute training drills to avoid players from attempting to run through the same gap in the unit simultaneously.** Colliding players could come in contact with the unit and/or connecting links resulting in an injury.

- **When not in use, store this equipment in a secure controlled area.** Unsupervised and/or inappropriate use of this equipment could result in serious injury.

Symbols

	Safety Alert: Precautions that involve your safety
	Store this equipment in a secure, controlled area: Unsupervised and/or inappropriate use of this equipment could result in serious injury.
	Pinch Point Symbol: Failure to keep hands away from pinch points will result in personal injury
	Remove Hanging Dummy When Not In Use: To reduce risk of injury, remove hanging dummy when it is not in use.
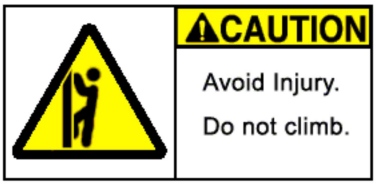	**Do Not Climb:** To reduce risk of injury, do not climb on the field equipment.

Rogers Athletic Field Equipment Specifications

Big Brutus Tackle Dummy (Part # 410816 or 410817)

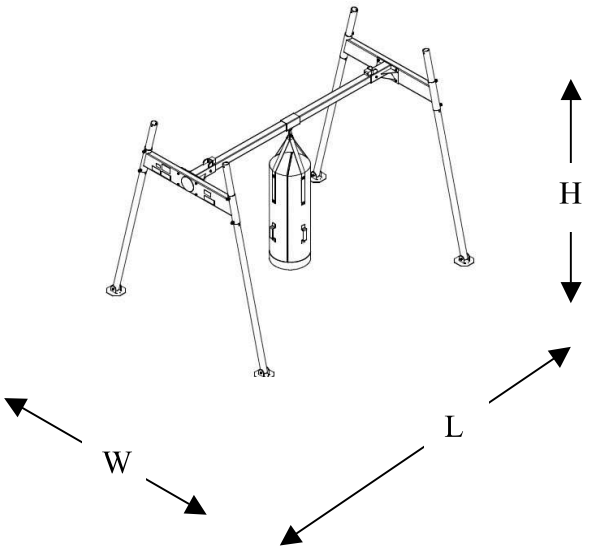

Weight:	With 80 lb dummy 760 lbs (346 kg) With 50 lb dummy 730 lbs (331 kg)
Height:	104” (265 cm)
Length:	103” (262 cm)
Width:	132.375” (336 cm)

- Practice offensive and defensive drills at one station.
- Design allows quick and easy set-up/take down.
- Multiple positions of the overhead tube allow players to vary closing speeds and angles of attack.
- Choose 50 lb or 80 lb hanging dummy in red, blue, green, yellow or orange.
- Durable design and construction for years of performance.
- Easy on/off positioning of hanging dummy.

Construction, Finish, and Hardware

- Constructed of ASTM specified steel.
- Baked-on powder coat finish
- Galvanized steel tube
- Zinc-plated hardware
- UHMW rollers

Rogers Athletic Field Equipment Specifications

1

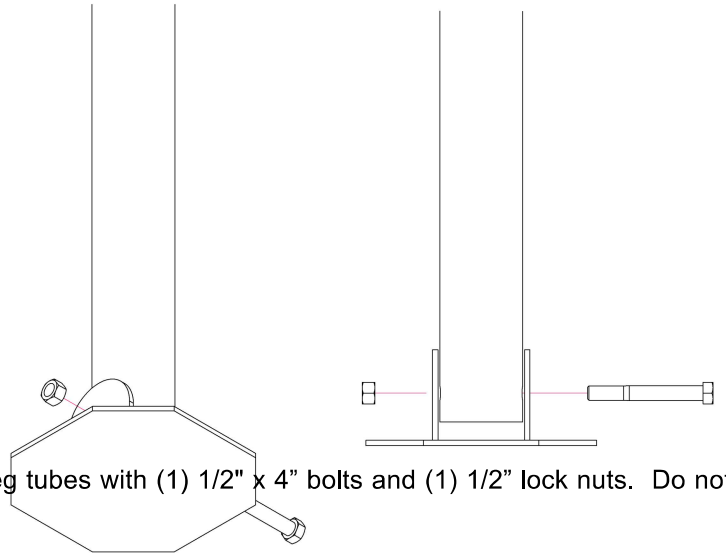

Attach foot pads to leg tubes with (1) 1/2" x 4” bolts and (1) 1/2” lock nuts. Do not over tighten. Repeat for each leg.

2

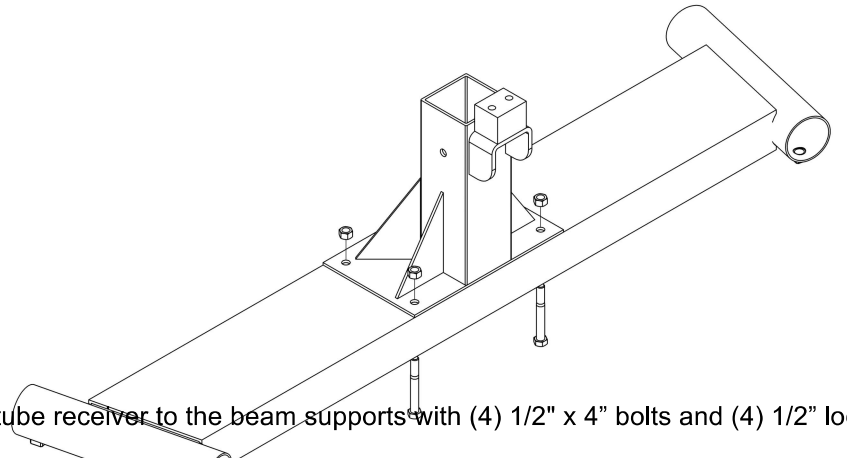

Attach the trolley tube receiver to the beam supports with (4) 1/2" x 4” bolts and (4) 1/2” lock nuts. Repeat.

3

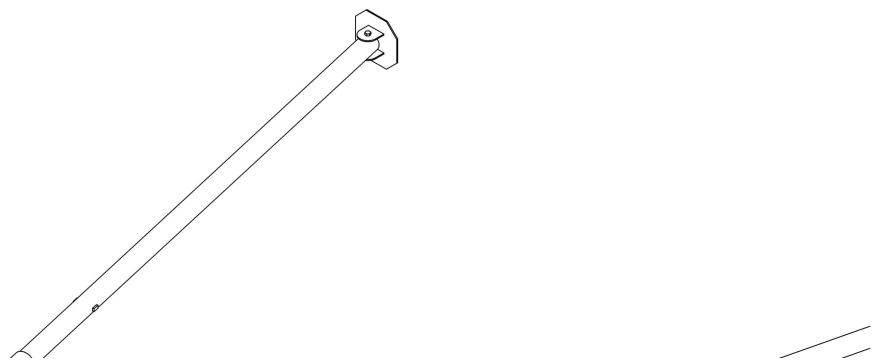

Insert the leg tubes into the beam support assemblies. Position the tops of the leg tubes flush with the tops of the beam support assembly. Secure each leg with (2) 5/8” x 1 1/2" bolts. Repeat for each leg.

4

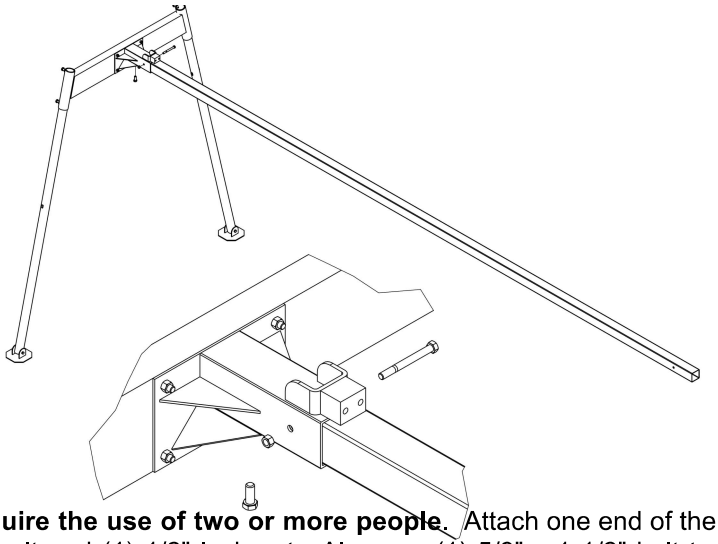

This step will require the use of two or more people. Attach one end of the trolley tube to a leg assembly with (1) 1/2" x 5” bolt and (1) 1/2” lock nut. Also use (1) 5/8” x 1 1/2” bolt to securely tighten trolley beam down.

5

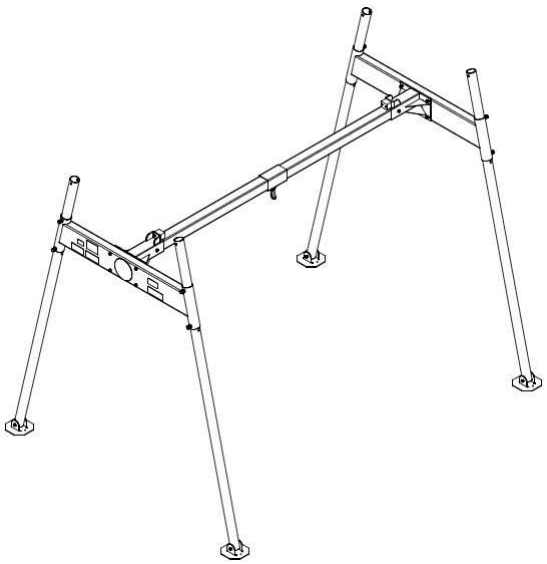

This step will require the use the trolley tube with the dummy hanger facing downward, the second leg assembly and attach same as step 4.

6

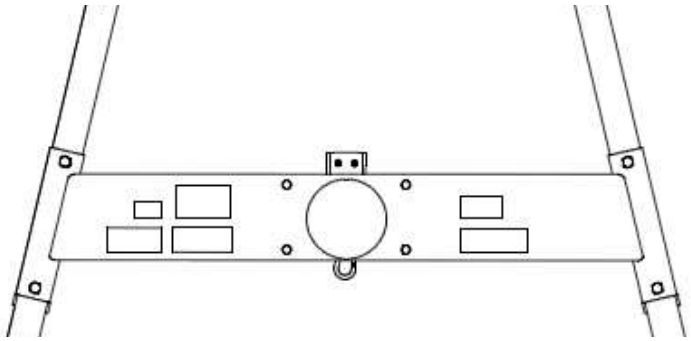

7

This s s possible to vary the slope or height of the assem a t is recom ie own all bolt

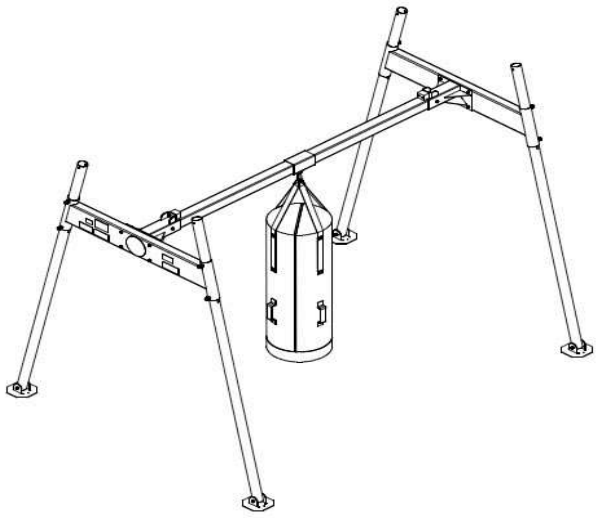

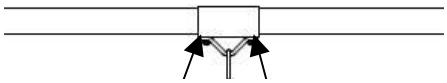

Double-check to ensure all bolts are tight. Hang dummy and tighten the set screws to secure to bag in place, set-up is complete. Dummy should be removed when finished using.

Maintenance

WARNING!
READ AND UNDERSTAND ALL MAINTENANCE PROCEDURES.
Failure to follow all procedures listed below may cause serious injury and a decrease in the equipments functional existence.

- **Frequently check to see that all bolts are securely fastened.**
- **Touch up paint can be used to cover any scratches or blemishes sustained through use.**
- **Never cover or deface the warning labels.**
- **A silicone base lubricant may be used on moving parts to maintain proper function.**
- **Replace any worn or damaged equipment with genuine Rogers Athletic parts.** Failure to do so may result in unsafe equipment and/or personal injury.

Customer Service

For parts or service contact Rogers Athletic Company. When ordering parts be sure to provide all relevant information available including the name and part number of the equipment purchased. This information is located on the cover of this product information package. Customer service hours are Monday through Friday from 8:00 a.m. to 5:00 p.m. Eastern Standard Time. Customers can phone (989) 386-2950 or toll free at 1-800-457-5337. Fax toll free at (888) 549-9659 or mail:

Rogers Athletic Company
3760 W. Ludington Drive
Farwell, Michigan 48622

Rogers Athletic Company
3760 N. Ludington Drive
Farwell, MI 48622
www.rogersathletic.com
(989) 386-2950
(800) 457-5337
Fax toll free (888) 549-9659

PIP410359